NOTES:

1. TO INSPECT ASSEMBLY, FOLLOW FIRST ARTICLE AND IN PROCESS INSPECTION SHEET.

2. APPLY LOCTITE 242.

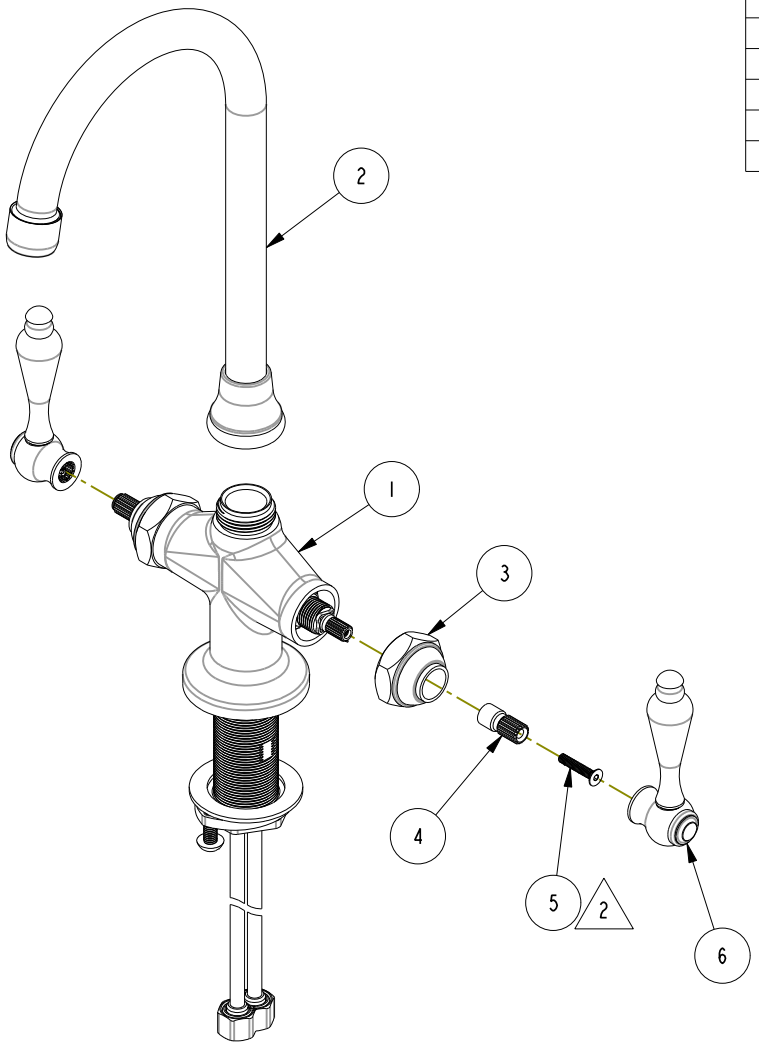

BILL OF MATERIAL (CURRENT LEVEL)

ITEM	PT/ASSY	DESCRIPTION	TYPE	QTY.
1	2-239	SINGLE HOLE CROSS BAR ASSEMBLY	ASSEMBLY	1
2	2-132	BAR SPOUT ASM	ASSEMBLY	1
3	12593	NUT - DOME HEX	PART	2
4	12062	ADAPTER - 20-T X 16-T	PART	2
5	92539	SCRW, M4X22 FLAT HD SOCKET HD CAP	PART	2
6	2-116	LEVER HANDLE (BRASS)	ASSEMBLY	2

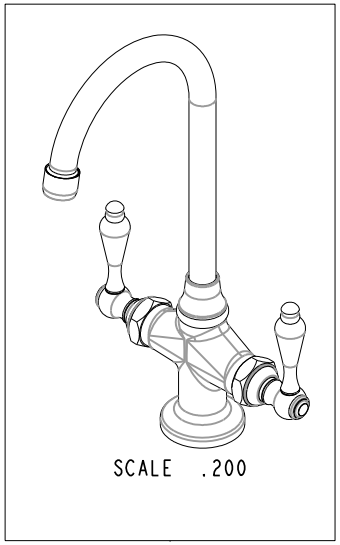

Juan Romo

ZONE	REV	DESCRIPTION	DATE	APPROVED
-	G	EN-4186-2e	11/23/21	V.V.
-	F	EN-4300hh	04/12/21	R.S.
-	E	EN-3173b	07/14/17	A.N
-	D	EN-2643	01/15/16	J.M
-	C	EN-2119	07/24/12	-
-	B	EO-0274	10/20/03	-
-	A	EO-0098	10/17/02	-
-	-	RELEASE	PRE-99	-

COPYRIGHT 2005 BRASSTECH, INC. THESE DRAWINGS AND THE DESIGNS DEPICTED HEREIN ARE THE PROPRIETARY PROPERTY OF BRASSTECH. ANY USE OR REPRODUCTION IS SUBJECT TO THE EXPRESS APPROVAL OF BRASSTECH. UNAUTHORIZED USE IS STRICTLY PROHIBITED. ALL RIGHTS RESERVED.

		-	-
TESTING	-	-	-
ASSEMBLY	-	-	-
PLATING	-	-	-
POLISHING	-	NEXT ASSY	USED ON
MACHINING	-	APPLICATION	
TOOLING FIXTURE #		REMOVE ALL BURRS AND SHARP EDGES	

UNITS ARE: INCHES [MM]
TOLERANCES ARE:
FRACTIONS ±1/16" DECIMALS .X ±.1 [2,5] .XX ±.06 [1,5] ANGLES ±1°
(X.XXX) DENOTES CRITICAL DIMS.
ALL THREADS ARE CRITICAL

DRAWN	VINAY	06/30/17
CHECKED	RAVINDRA	06/30/17
APPROVED	A.N	06/30/17

BRASSTECH INCORPORATED
2001 CARNEGIE AVE.
SANTA ANA, CA 92705
(949) 417-5207

BAR FAUCET

DWG NO. 8081 REV G

SCALE .300 REF. - SHEET 1 OF 2

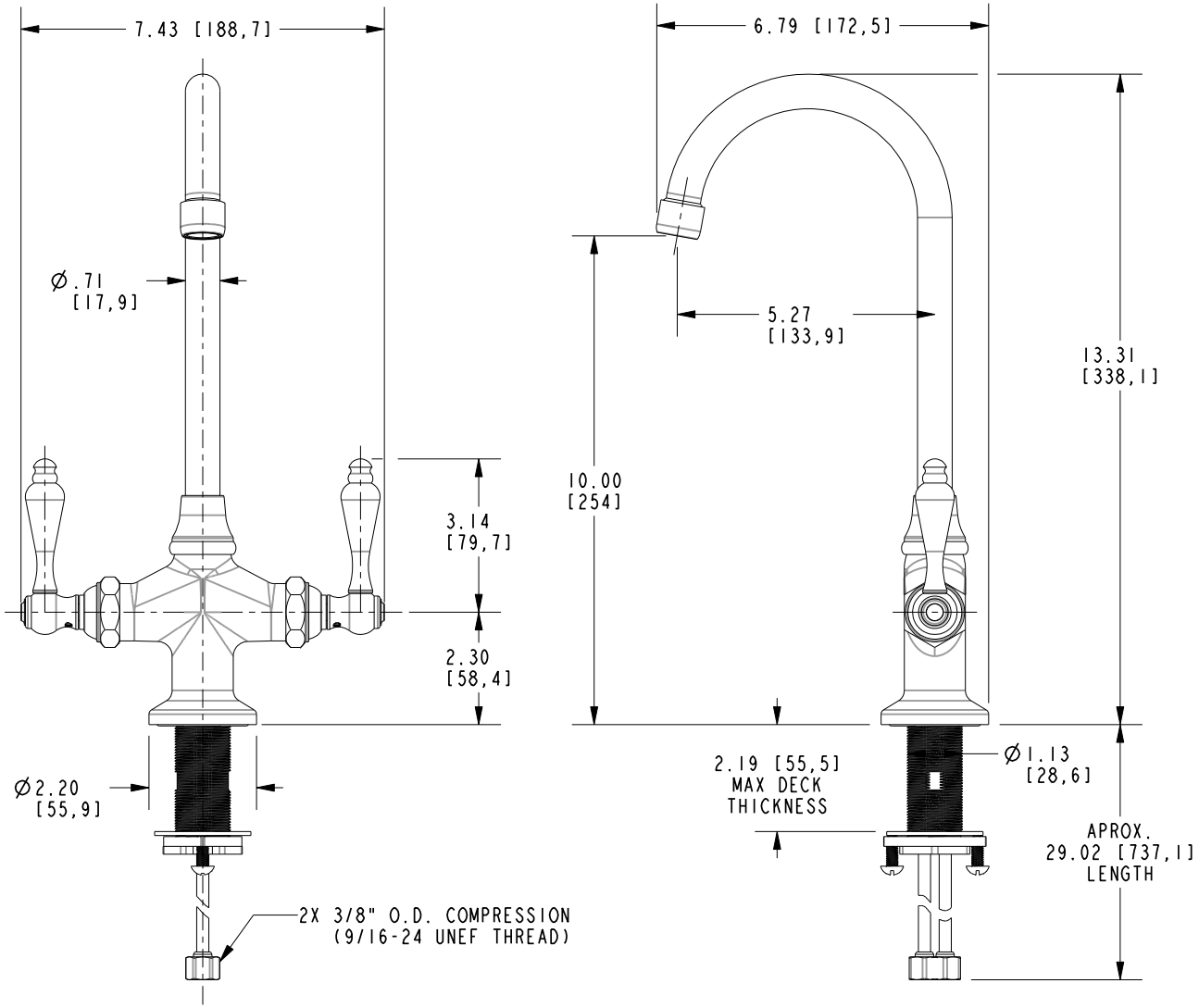

BRASSTECH INCORPORATED

2001 E. CARNEGIE AVE.
SANTA ANA, CA 92705
(949) 417-5207

DWG NO.	REV
8081	G

SCALE	REF.	SHEET
.275	-	2 OF 2